MaxO$_2$®+A Oxygen Analyzer

SENSING ANALYSIS DELIVERY

Patented ergonomic design fits comfortably in your hand.

MAXO$_2$+A OVERVIEW

The MaxO$_2$+A was designed with simplicity and portability in mind. This analyzer quickly adapts for use in tubing applications and is ideal for checking oxygen percent accuracy in line or on concentrators. Its patented ergonomic design fits comfortably in your hand and features a simple one-touch on/off and calilbration. The MaxO$_2$+A will calibrate to room air (20.9%) or 100% oxygen. For applications needing an external sensor, check out our MaxO$_2$+AE.

PART NUMBERS

MaxO$_2$+A R217P62
MaxO2+A w/Flow Adapter R217P62-004

ACCESSORIES

15mm Tee Adapter RP16P02
Flow Diverter R110P10
Tight Fit Case R217P32
Max-250+ R125P02-011
Barbed Adapter with Tubing..... R207P17

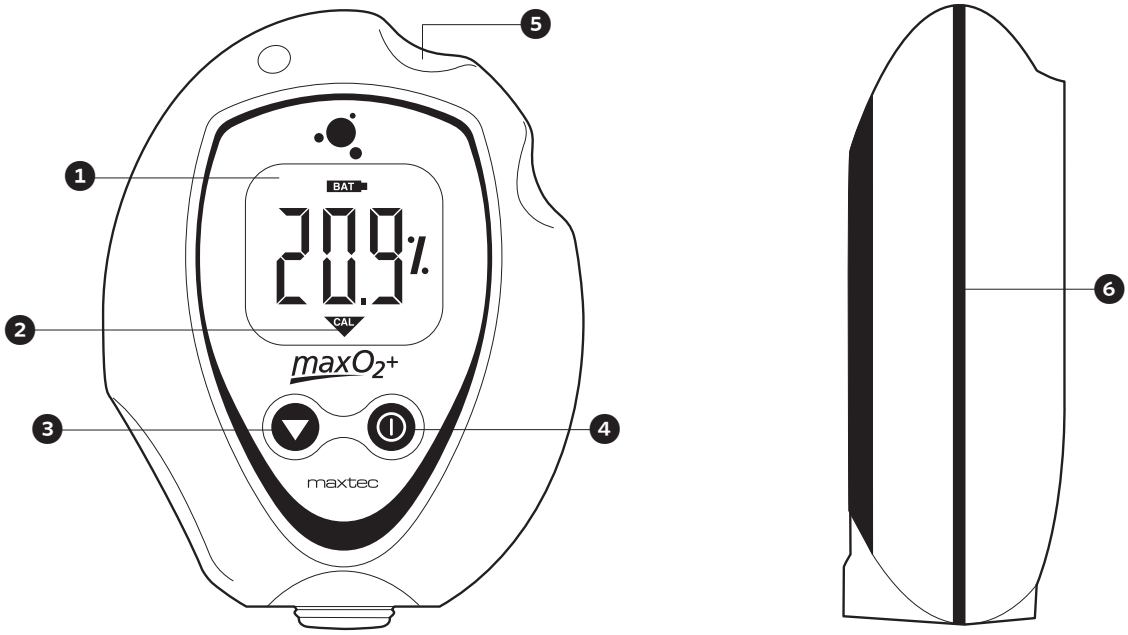

1. **Large LCD**
   Easy to read characters
2. **Calibration Reminder**
   Reminds once a week
3. **One-Touch Calibration**
   Auto cal. to room air or 100% oxygen
4. **On/Off Button**
   One-touch on and off
5. **Patented Ergonomic Design**
   Fits comfortably in your hand
6. **Rubber Gasket**
   Prevents moisture from contact board

Specifications

Measurement Range	0 - 100% Oxygen
Display Resolution	0.1% Oxygen
Warm-up Time	None Required
Operating Temperature Range	15°C - 40°C (59°F - 104°F)
Operating Humidity Range	0 - 95% RH non-condensing
Oxygen Measurement Accuracy	±3% actual oxygen level over full operating temperature range
Sensor Connection	M16 x 1 Thread
Sensor Operating Life	>900,000 oxygen percet hours, minimum 2 years in typical applications
Maximum Storage Temperature Range	15°C - 50°C (5°F - 122°F)
Optimal Storage Temperature Range	5°C - 25°C (41°F - 77°F)
90% Response Time	<15 seconds @ 23°C
Low-Battery Indicator	“BAT” icon displayed on LCD
Power Requirement	2-AA Alkaline Batteries (2x1.5 Volts)
Calibration Reminder	One week timer started with every calibration , “CAL” icon displayed on LCD
Sensor Type	Maxtec MAX-250+ galvanic fuel cell
Total Weight	0.4 lbs (170 grams)
Dimensions	3.75” (tall) x 3.00” (wide) x 1.33” (thick)

MaxO2®+AE Oxygen Analyzer

SENSING ANALYSIS DELIVERY

Patented ergonomic design fits comfortably in your hand.

MAXO2+AE OVERVIEW

The MaxO2+AE is best used wherever an inline analyzer is required—especially useful with older ventilators or oscillators. Its patented, ergonomic design fits comfortably in your hand and features a simple, one-touch calibration and ON/OFF control. The MaxO2+AE will calibrate to room air (20.9%) or 100% oxygen. For applications that require an internal sensor, check out our MaxO2+A.

PART NUMBERS

MaxO2+AE R217P72

ACCESSORIES

15mm Tee Adapter RP16P02
Flow Diverter R110P10
Tight Fit Case R217P32
Wall Mount R205P86
Max-250e. R125P03-002
Max-250esf R115P85

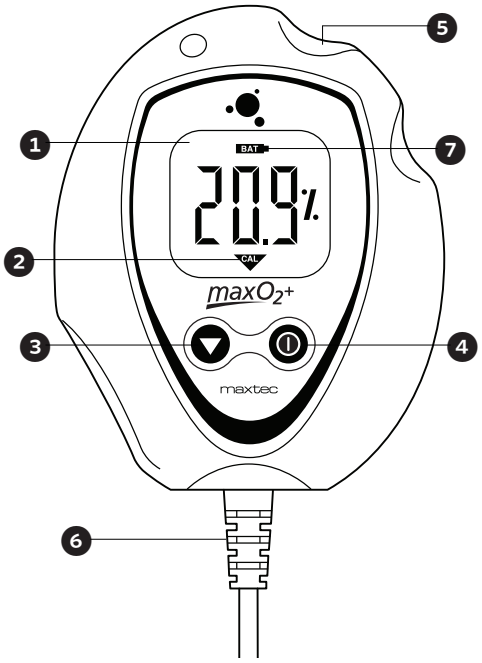

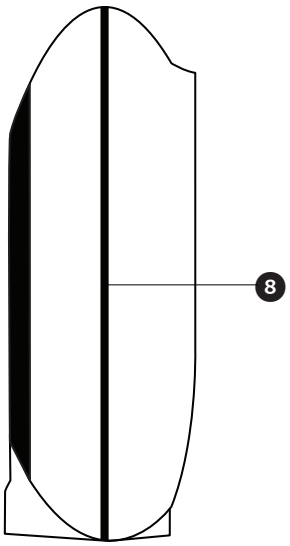

1. **Large LCD**
   Easy to read characters
2. **Calibration Reminder**
   Reminds once a week
3. **One-Touch Calibration**
   Auto cal. to room air or 100% oxygen
4. **On/Off Button**
   One-touch on and off
5. **Patented Ergonomic Design**
   Fits comfortably in your hand
6. **External Sensor Cable**
   10 feet extended, 3 feet retracted
7. **Battery Life**
   5,000+ Hours of Battery Life
8. **Rubber Gasket**
   Prevents moisture from contact board
9. **External Sensor - MAX 250E**
   0 - 100% Oxygen, 24 Month Warranty

Specifications

Measurement Range	0 - 100% Oxygen
Display Resolution	0.1% Oxygen
Warm-up Time	None Required
Operating Temperature Range	15°C - 40°C (59°F - 104°F)
Operating Humidity Range	0 - 95% RH non-condensing
Oxygen Measurement Accuracy	±3% actual oxygen level over full operating temperature range
Sensor Connection	M16 x 1 Thread
Sensor Operating Life	>900,000 oxygen percet hours, minimum 2 years in typical applications
Maximum Storage Temperature Range	15°C - 50°C (5°F - 122°F)
Optimal Storage Temperature Range	5°C - 25°C (41°F - 77°F)
90% Response Time	<15 seconds @ 23°C
Low-Battery Indicator	“BAT” icon displayed on LCD
Battery Life	Approximately 5,000 hours with continuous use
Power Requirement	2-AA Alkaline Batteries (2x1.5 Volts)
Calibration Reminder	One week timer started with every calibration , “CAL” icon displayed on LCD
Sensor Type	Maxtec MAX-250E galvanic fuel cell
Sensor Cable Length	10 feet extended, 3 feet retracted
Total Weight	0.6 lbs (285 grams)
Dimensions	3.0”(W) x 36.0”(H) x 1.5”(D) [76mm x 914mm x38mm] Height includes external cable length (retracted)

ML# 264 REV. C

MaxBlend 2

An all-in-one blender, O_2 monitor, and flow meter.

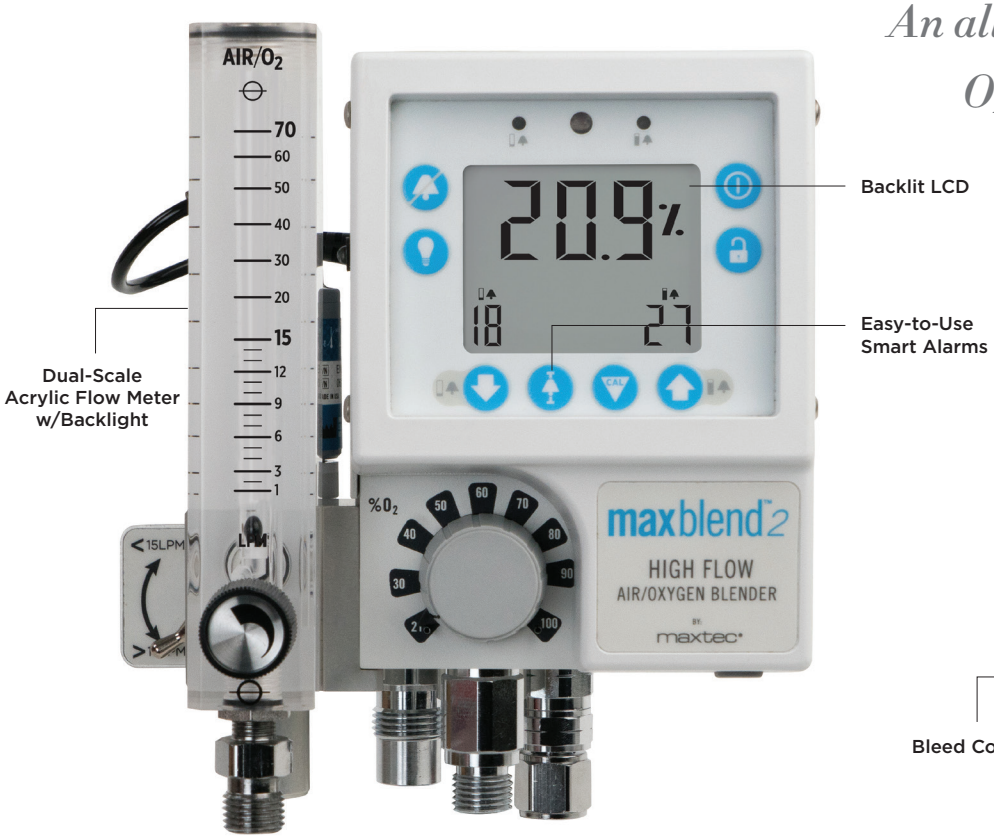

Backlit LCD

Easy-to-Use Smart Alarms

Dual-Scale Acrylic Flow Meter w/Backlight

Bleed Control

AVAILABLE NOW!

Maxtec is proud to introduce the all-new **MaxBlend 2**, designed with years of customer feedback in mind. This easy-to-use, low maintenance blender has a range of new features and improvements, including a backlit LCD and acrylic flow meter, smart alarms, DC power port, extended battery life, and more—all backed by a Maxtec two-year warranty.

PART NUMBERS

DISS – LOW – FLOW:

0-3 LPM R229P01-011
0-15 LPM R229P01-010
0-30 LPM. R229P01-001

DISS – HIGH – FLOW:

0-70 LPM. R229P02-001

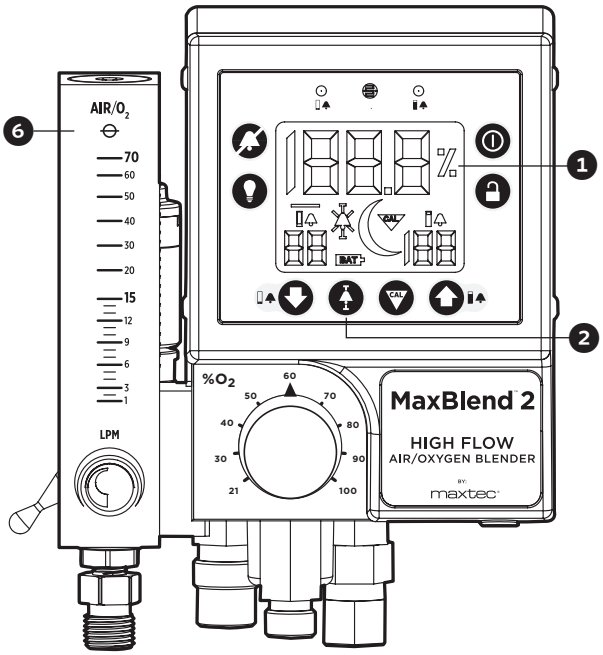

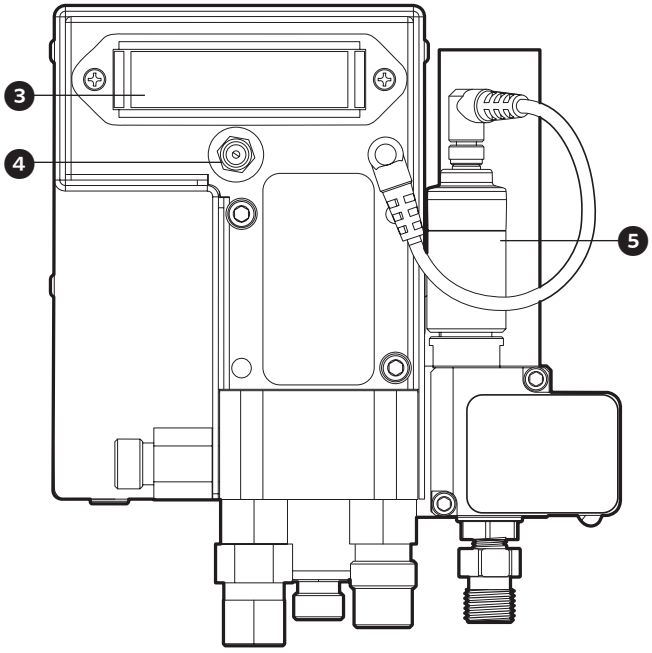

1. **Large, Backlit LCD**
   Provides clarity in low-light environments
2. **Smart Alarms**
   Sets alarms 3% +/- current reading
3. **Long Battery Life**
   Up to 5,000 hours on 4 AA batteries
4. **DC Power Port**
   For optional remote power supply
5. **External MAX-550 O_2 Sensor**
   Long-life smart sensor
6. **Acrylic Flow Meter**
   With backlighting

Specifications

Model Weight	Approximately 5.3 lbs (2404 grams)
Power Source	Four (4) AA alkaline batteries
Battery Life	5,000 hours (continuous operation; no alarm, no lights)
Oxygen Concentration Measurement Range	0% to 100% oxygen
Display Resolution	0.1% oxygen
Oxygen Concentration Adjustment Range	21% to 100% oxygen
Gas Supply Pressure	The gas supplies must provide clean, dry, medical-grade air and oxygen at a pressure of 30 to 75 psig (2.1 to 5.2 bar). Optimal performance is achieved at 50 psig inlet pressures
Pressure Drop	Less than 6 psi (0.4 bar) @ 50 psig (3.4 bar) sensor supply pressure and 10 lpm flow rate
Sensor Bleed Flow	0.1 lpm @ 50 psig (3.4 bar)
Bleed Flow (toggle ON)	3 lpm for low-flow blender and 13 lpm for high-flow blender
Outlet Flow Range	0-30 lpm for low-flow blender 2-100 lpm for high-flow blender with inlet pressures at 50 psig (3.4 bar)

ML# 263 Rev.E

maxtec
2305 South 1070 West
Salt Lake City, Utah 84119
866.4.Maxtec | maxtec.com

MicroMax™ Air/O_2 Blenders

- **High Flow and Low Flow Models**
- **Unique, Durable and Versatile**
- **ON/OFF Bleed Control**
- **Includes Universal Mounting Bracket**
- **Durable ABS Housing**
- **Available with Blender Buddy**
  (Contains a 0-3 lpm & 0-15 lpm flow meter)

Blender w/Blender Buddy

Blender w/Blender Buddy & MaxO2+A

MicroMax Low Flow Model Blender

Specifications:

Dimensions:	4.92” (D) x 2.25” (W) x 4.10” (H)
Weight:	2.9lbs (1.3 kg)
Operating Temperature:	59°F to 104°F (15°C to 40°C)
FiO_2 Accuracy:	±3% of full scale
Bypass Alarm Activation:	High Flow: 13-25 psi, Low Flow: 18-22 psi
Primary Outlet Flow Range:	15-120 lpm (High Flow) Low Flow: 3-30 lpm (Low Flow)
Auxillary Outlet Flow Range:	2-100 lpm (High Flow) 0-30 lpm (Low Flow)
Bleed Flow (at 50 psi):	13 lpm or less (High Flow), 3 lpm or less (Low Flow)
Maximum Combined Flow:	≥120 lpm (High Flow) ≥30 lpm (Low Flow)
No. of Primary Outlet Ports:	1
No. of Auxillary Ports	1

Part Numbers

MicroMax Low Flow (DISS) R203P13
MicroMax Low Flow (NIST) R203P13-001
MicroMax Low Flow (DISS) w/Blender Buddy . . . R203P13-002
MicroMax Low Flow (NIST) w/Blender Buddy . . . R203P13-003

MicroMax High Flow (DISS) R203P14
MicroMax High Flow (NIST) R203P14-001
MicroMax High Flow (DISS) w/Blender Buddy . . R203P14-002
MicroMax High Flow (NIST) w/Blender Buddy . . R203P14-003

ML# 238 REV. C

maxtec
6526 South Cottonwood Street
Salt Lake City, Utah 84107
866.4.Maxtec | www.maxtecinc.com

CELDA DE OXÍGENO

Maxtec cuenta con una amplia variedad de celdas compatible con mesas de anestesia, ventiladores, analizadores de oxígeno, etc.

- Sensores estándar (de base alcalina) cumplen las especificaciones OEM para aplicaciones respiratorias.
- La serie MAX-250 utiliza una tecnología patentada a base de ácido débil para proporcionar una señal más estable, una vida útil más larga del sensor y soportar altos niveles de CO2, CO y otros gases ácidos.

P/N	Descripción	Equipo		Imagen	Garantía
		Marca	Modelo		
R112P10	MAX-10 O2 Probe	Datex Ohmeda	7900/ Aespire 7100		12 meses
R113P10	MAX-11 O2 Probe	Dräger	Fabius/Fabius Plus /Evita 2 /Babylog / Savina		12 meses
R109P45	MAX-12 O2 Probe	Taema	Horus		14 meses
R109P53	MAX-12C O2 Probe	Carefuison	AVEA		14 meses
R115P10	MAX-13 O2 Probe	Neumovent	Graph		14 meses
R114P70	MAX-16 O2 Probe	Puritan Bennett	760/840		16 meses

R116P10	MAX-17 O2 Probe	Teledyne	60T		12 meses
R125P04-001	MAX-250A O2 Probe	Spacelabs	Frontline/Focus		12 meses
R125P02-003	MAX-250B O2 Probe	SLE	5000		24 meses
R109P09	MAX-7 O2 Probe	Teledyne	AX300		12 meses
R112P16	MAX-47 O2 Probe	Teleflex	Hudson		12 meses